DYNAMIC PRESSURE PERFORMANCE TEST
(taken from BAAQMD test procedure ST-27)

1. Applicability

1.1 This procedure is used to verify compliance with the applicable dynamic back pressure limits imposed on any Stage II vapor control system. The applicability of the following Alternate Methods is dependent upon the regulatory requirements imposed by the California Air Resources Board (CARB) Executive Order.

1.1.1 **Alternate Method 1**. This procedure is applicable if the dynamic back pressure standards are imposed from the nozzle to the gasoline storage tank, provided remote vapor check valves are not part of the Stage II system.

1.1.2 **Alternate Method 2**. This procedure is applicable if the dynamic back pressure standards are imposed from the Stage II riser to the gasoline storage tank, provided there is no vacuum-producing device located between the riser and tank.

1.1.3 **Alternate Method 3**. This procedure is applicable if the dynamic back pressure standards are imposed at the nozzle/vehicle interface during vehicle fueling.

1.1.4 **Alternate Method 4**. This procedure shall be conducted, in conjunction with the applicable of Alternate Methods 1, 2, or 3 if the Stage II system utilizes an incinerator.

1.2 Alternate Methods 1 and 2 shall be conducted with the Stage I vapor poppet **open**. Alternate Methods 3 and 4 shall be conducted with the poppet **closed**.

1.3 Other Alternate Methods may be used provided that written approval has been granted by the Ohio EPA, Division of Air Pollution Control. Such approval shall be based upon demonstrated equivalency of any proposed methodology.

2. Principle

2.1 Using Alternate Methods 1, 2, or 4, the dynamic back pressure during vehicle fueling is simulated by passing nitrogen through the Stage II vapor control system at specified rates. The resultant dynamic back pressure is measured using a pressure gauge, or equivalent device. Alternate Method 3 is a direct measurement of the pressure at the nozzle/fillpipe interface during gasoline dispensing. Liquid blockages in the vapor return lines are also detected using these Methods.

3. RANGE

3.1 The minimum and maximum dynamic back pressures that can be measured are dependent upon the range of the pressure gauges used. Required gauge ranges are as follows:

3.1.1 **Alternate Method 1**. 0-0.5 and 0-2 inches H_20.

3.1.2 **Alternate Method 2**. 0-0.25, 0-1, and 0-2 inches H_2O.

3.1.3 **Alternate Method 3**. -1.0-+1.0 inches H_2O.

3.1.4 **Alternate Method 4**. 0-0.5 and 0-1 inches H_2O.

3.2 If mechanical pressure gauges are employed, the minimum diameter of the gauge face shall be four inches, and the minimum accuracy of the gauge shall be three percent of full scale.

3.3 If an electronic pressure measuring device is used, the full-scale range of the device shall not shall not exceed 0-10 inches H_2O with a minimum accuracy of 0.5 percent of full scale. A 0-20 inches H_2O device may be used provided that the equivalent accuracy is not less than 0.25 percent of full-scale.

4. Interferences

4.1 Any leaks in the nozzle vapor path, vapor hose, or underground vapor return piping may result in erroneously low dynamic back pressure measurements.

4.2 For those Stage II systems possessing a design incompatible with this test procedure, testing shall be conducted in accordance with the procedures specified in the applicable CARB Executive Order.

5. Apparatus

5.1 Nitrogen High Pressure Cylinder with Pressure Regulator. Use a high pressure nitrogen cylinder capable of maintaining a pressure of 2000 psig and equipped with a compatible two-stage pressure regulator and a one psig relief valve. The nitrogen cylinder **must** be grounded and the one psig (maximum) relief valve **must** be present during the test.

5.2 Rotameter. Use a calibrated rotameter capable of accurately measuring nitrogen flowrate applicable for the imposed dynamic back pressure limits.

5.3 Pressure Gauges. Use differential pressure gauges, or equivalent, as specified in the applicable subsection of Section 3.1.

5.4 Automobile fillpipe. Use an automobile fillpipe, if applicable, known to be compatible with all bellows-equipped vapor control nozzles, and equipped with a pressure tap. See Figure 1.

5.5 Nitrogen. Use commercial grade nitrogen.

5.6 Hand Pump. Use a gasoline compatible hand pump, if applicable, to drain any gasoline from condensate pots.

5.7 Stopwatch. For Alternate Method 3, use a stopwatch, or equivalent, accurate to within 0.5 seconds.

6. Pre-test Procedures

6.1 **Alternate Method 1.** The following subsections are applicable for those Stage II systems where a limitation is imposed on the dynamic back pressure between the nozzle and the gasoline storage tank, provided that remote vapor check valves are not employed. For those Stage II systems which **do not** utilize a remote vapor check valve, assemble the apparatus as shown in Figure 1, ensuring that the riser shut-off valve on the test equipment is closed. If a Hirt Stage II system is used, the vacuum producing device shall be turned off during this test.

6.1.1 Assemble the Dynamic Pressure Performance Test Assembly as shown in Figure 1.

6.1.2 The test equipment **must** be leak-checked prior to use. Plug the nozzle end of the auto fillpipe and open the nitrogen cylinder. Adjust the flow meter control valve until a pressure of 50 percent of full scale is indicated on the high range pressure gauge. Close the nitrogen cylinder valve and any toggle valves. A pressure decay of less than 0.2 inches H_2O, in five minutes, is considered acceptable.

6.1.3 Perform an initial visual examination for vapor leaks at the nozzles and hoses of the Stage II system to be tested. All leak sources shall be repaired or the component removed and replaced prior to testing.

6.1.4 The Stage I vapor poppet shall be propped open in such a manner that the valve is not damaged. This may be accomplished using a Dynamic Pressure Release Assembly as shown in Figure 2.

6.1.5 Pour a minimum of two (2) gallons of gasoline into each and every Stage II vapor return riser. This gasoline may be introduced into the Stage II riser in any appropriate manner. Alternatively, a minimum of twenty gallons of gasoline may be introduced into the Stage II riser furthest from the gasoline storage tank, provided that the riser is common to all products available at that dispenser. If product-specific risers are employed, a minimum of seven gallons, per product grade, may be introduced into the riser of each product which is furthest from the gasoline storage tank.

6.1.6 Allow fifteen (15) minutes for liquid in the vapor return piping to drain.

6.1.7 Completely drain any gasoline from the spout and bellows of each nozzle.

6.1.8 For those vapor piping configurations which utilize a condensate pot, drain the pot prior to testing.

6.2 Alternate Method 2.

6.2.1 Assemble the Capped "T" Assembly as shown in Figure 3.

6.2.2 Open the Stage I vapor poppet for the affected tank.

6.2.3 Pour a minimum of two (2) gallons of gasoline into each and every Stage II vapor return riser. This gasoline may be introduced into the Stage II riser in any appropriate manner.

6.2.4 Allow fifteen (15) minutes for liquid in the vapor return piping to drain.

6.2.5 For those vapor piping configurations which utilize a condensate pot, drain the pot prior to testing.

6.3 Alternate Method 3.

6.3.1 Assemble the Torus Pressure Test Assembly as shown in Figure 4.

6.3.2 The Stage I vapor poppet shall remain closed during this test.

6.4 Alternate Method 4.

6.4.1 Assemble the Vent Pipe Pressure Assembly as shown in Figure 5.

6.4.2 Carefully remove the vent pipe pressure/vacuum (P/V) valve.

6.4.3 Open the Stage I vapor poppet for the affected tank.

6.4.4 Insure that the collection unit of the Stage II system is turned off.

7. Testing

7.1 **Alternate Method 1.** Insert the nozzle into the fillpipe of the Dynamic Pressure Performance Test Unit as shown in Figure 1 below, ensuring that a tight seal at the fillpipe/nozzle interface is achieved.

7.1.1 Connect the nitrogen supply to the test assembly.

7.1.2 Open the nitrogen supply, set the delivery pressure to 5 psig, and use the flowmeter control valve to adjust the flowrate to lowest of the required nitrogen flowrates.

7.1.3 A pulsating gauge needle indicates nitrogen passing through a liquid obstruction in the vapor return system. Close the flow meter control valve, redrain the nozzle and hose assembly, and repeat the test. If this condition re-occurs, the cause of the liquid trap in the system must be corrected.

Figure 1

Dynamic Pressure Performance Test Assembly

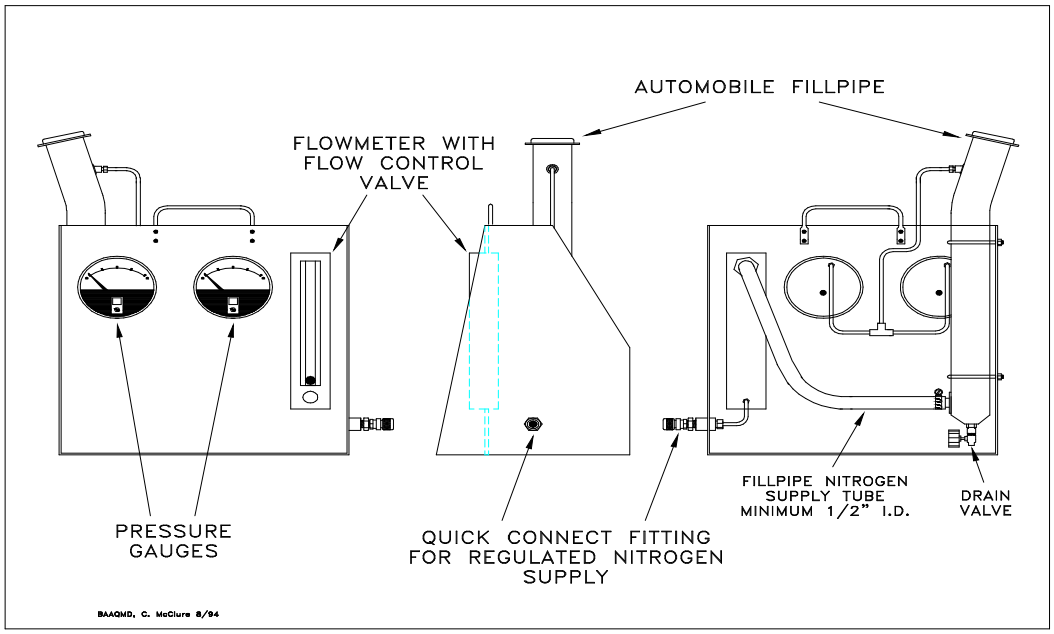

7.1.4 The following information shall be recorded on the field data sheet, as shown in Form 1:

(a) Nozzle Number
(b) Gauge needle action
(c) Dynamic back pressure, inches H_2O

Specified nitrogen flowrates and associated maximum allowable Dynamic Backpressures are included in Form 1.

7.1.5 Repeat subsections 7.1.2 through 7.1.4 at all required nitrogen flowrates for each and every nozzle.

7.1.6 Close and replace the dust cover on the Stage I poppet.

Figure 2

Dynamic Pressure Release Assembly

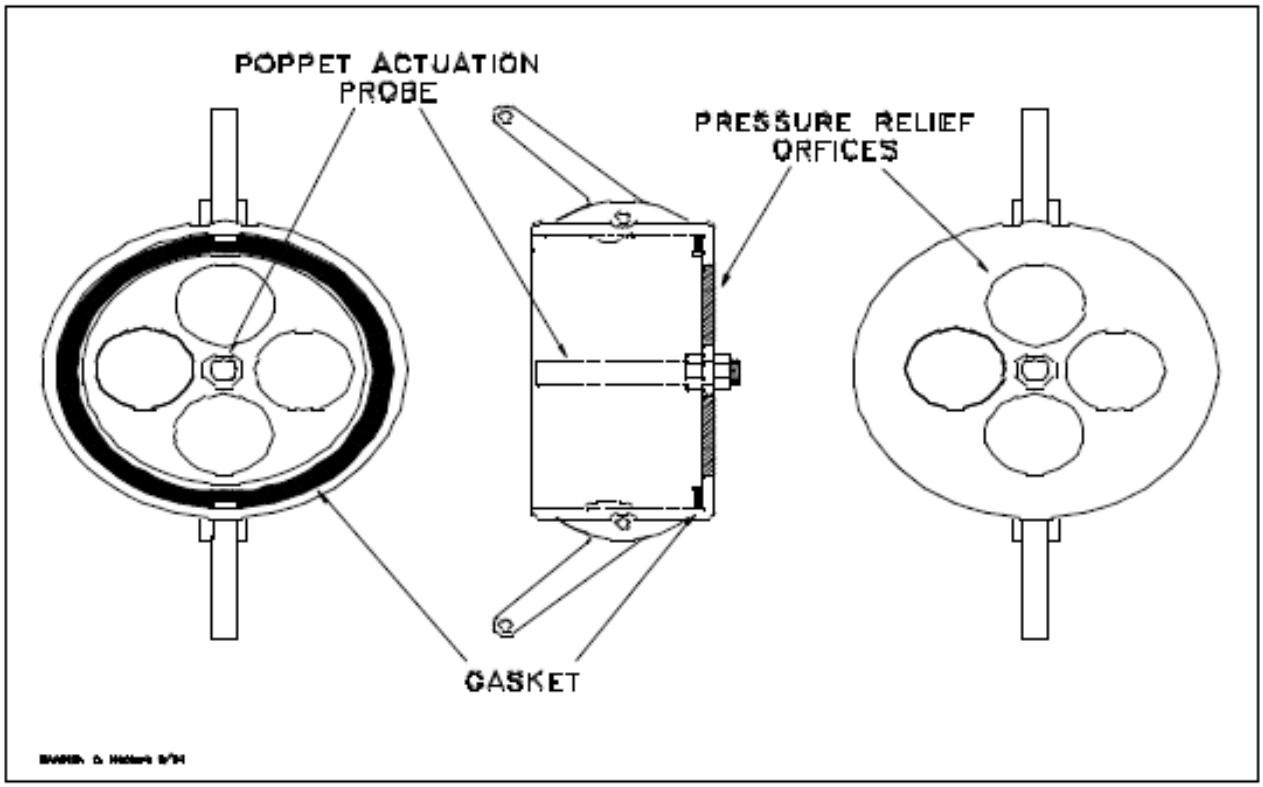

7.2 **Alternate Method 2**. Those Stage II systems subject to regulatory limitations on the dynamic back pressure between the Stage II riser and gasoline storage tank shall be tested using this methodology.

7.2.1 Disconnect the Stage II riser and install the "T" assembly as shown in Figure 3 below.

Figure 3

Capped "T" Assembly

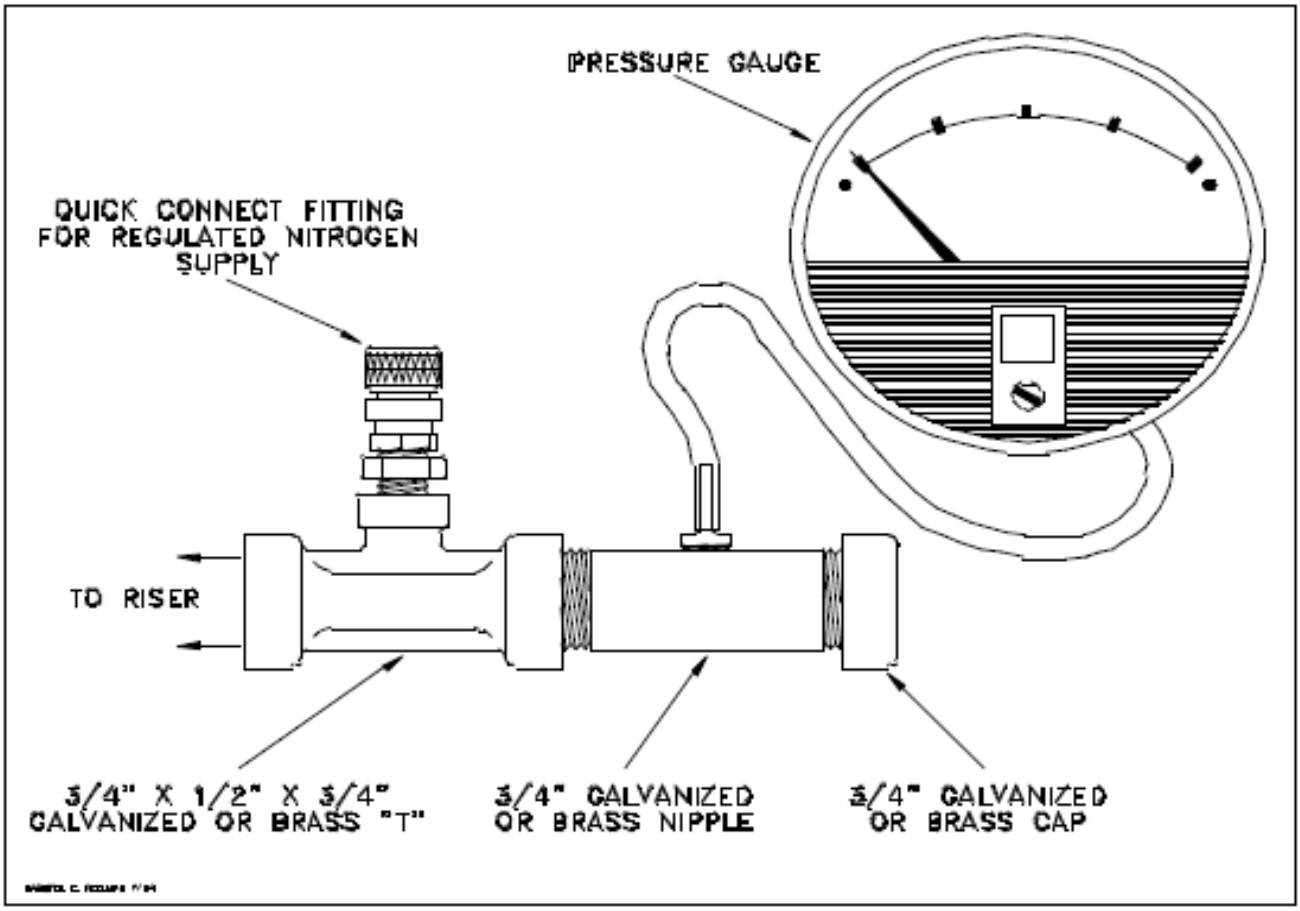

7.2.2 Connect the nitrogen supply to the "T" assembly.

7.2.3 Open the nitrogen supply, set the delivery pressure to 5 psig, and use the flowmeter control valve to adjust the flowrate to lowest of the required nitrogen flowrates.

7.2.4 A pulsating gauge needle indicates nitrogen passing through a liquid obstruction in the vapor return plumbing. If this occurs, the cause of the liquid trap must be corrected.

7.2.5 The following information shall be recorded on the field data sheet, as shown in Form 2:

(a) Riser Number
(b) Gauge needle action
(c) Dynamic back pressure, inches H_2O

Specified nitrogen flowrates and associated maximum allowable Dynamic Backpressures are included in Form 2.

7.2.6 Repeat subsections 7.2.3 through 7.2.5 at all required nitrogen flowrates for each and every riser.

7.3 **Alternate Method 3.** Those bellows-equipped Stage II systems subject to regulatory limitations on the dynamic back pressure at the nozzle/fillpipe interface during gasoline dispensing shall use the following methodology.

7.3.1 Assemble the Torus Pressure Test Assembly (Donut) as shown in Figure 4 below

7.3.2 Insert the nozzle spout through the inner hole of the donut.

7.3.3 Insert and latch the nozzle in the vehicle fillpipe. Visually insure that a tight connection is made between the donut and fillpipe.

Figure 4

Torus Pressure Test Assembly

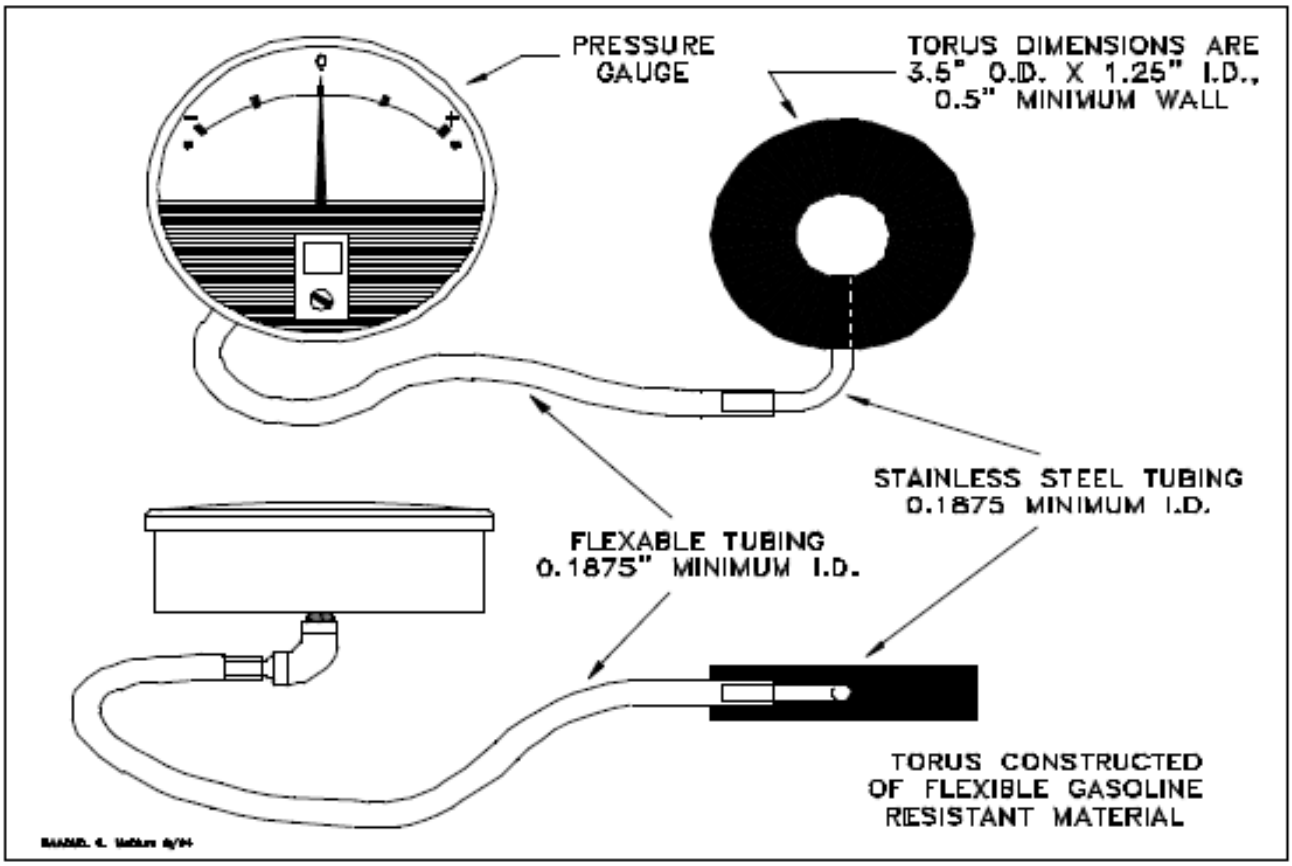

7.3.4 Activate the dispenser, set the nozzle hold-open latch on low, and after at least one gallon has been dispensed start the stopwatch. Dispense a minimum of four gallons of gasoline.

Use the stopwatch to accurately time the dispensing rate. Record the total gallons dispensed and calculate the flow rate in gallons per minute. The following data shall be recorded on the field data sheet as shown in Form 3:

(a) Nozzle number and gasoline grade
(b) Gallons dispensed during test
(c) Maximum dynamic back pressure, inches H_2O
(d) Minimum dynamic back pressure, inches H_2O
(e) The average dispensing rate, gallons per minute
(f) Allowable backpressure range specified in the Executive Order

7.3.5 This Alternate Method shall only be conducted with the Stage I vapor poppet closed, since gasoline is being dispensed during the test.

7.4 **Alternate Method 4**. Those Stage II systems which utilize an incinerator shall conduct this test in conjunction with the applicable of Alternate Method 1, 2, or 3. This procedure verifies proper drainage of gasoline from the base of the vent pipe to the gasoline storage tank.

7.4.1 After verifying compliance with the dynamic back pressure standards, pursuant to the applicable of Alternate Methods 1, 2, or 3, close the Stage I vapor poppet.

7.4.2 Remove the pressure/vacuum (P/V) valve from each vent pipe.

7.4.3 Carefully pour a minimum of five gallons of gasoline down each vent pipe.

7.4.4 Install the Vent Pipe Pressure Assembly as shown in Figure 5 below. Open the Stage I poppet on all affected tanks.

Figure 5

Vent Pipe Pressure Assembly

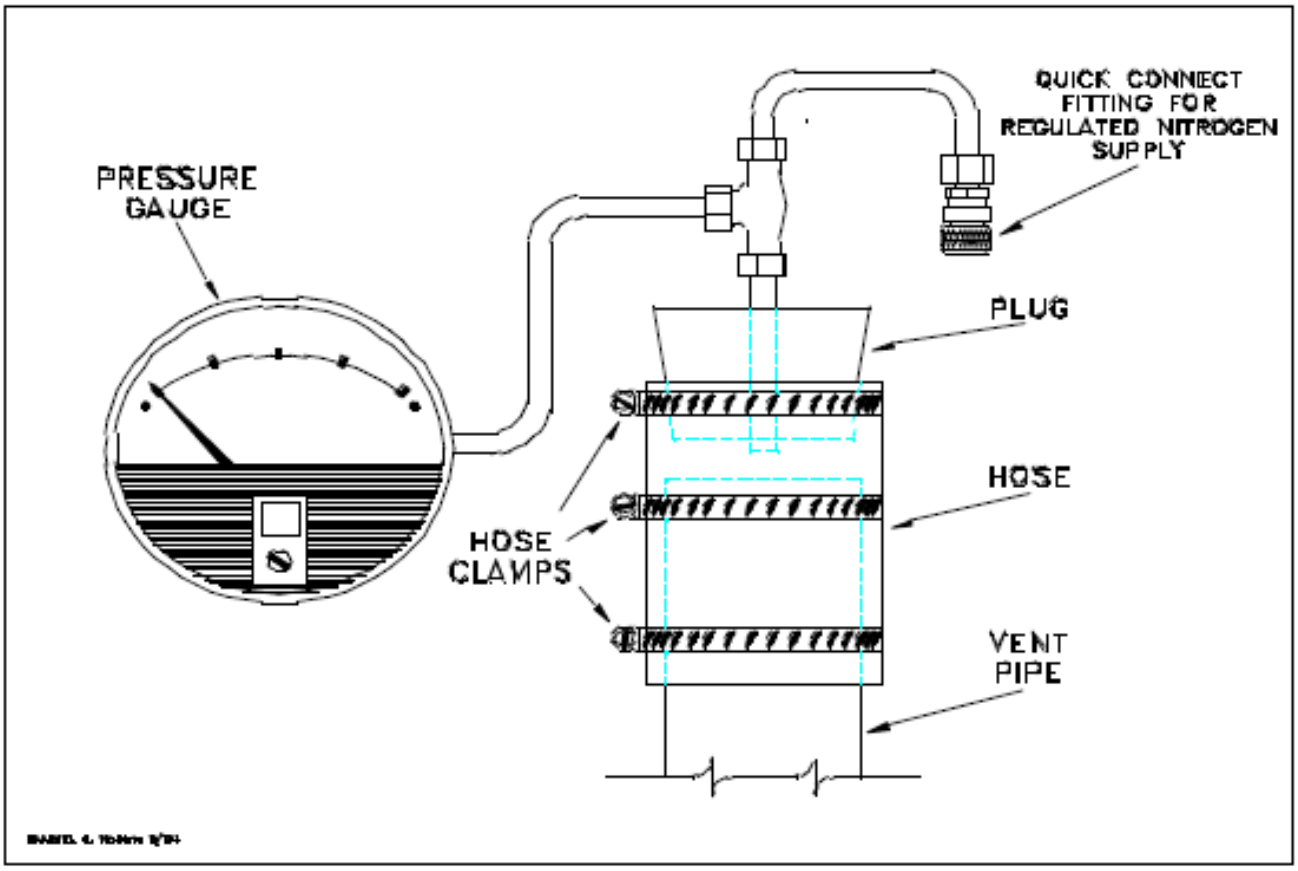

7.4.5 Connect the nitrogen supply to the Vent Pipe Pressure Assembly.

7.4.6 Open the nitrogen supply and adjust the flowrate to 60 CFH.

7.4.7 After a minimum of thirty seconds, record the dynamic back pressure.

7.4.8 A dynamic back pressure, from the top of the vent pipe to the storage tank, of less than 0.5 inches H_2O shall be considered acceptable.

7.4.9 Remove the Vent Pipe Pressure Assembly, carefully reinstall the P/V valve, and close the Stage I poppets.

8. Reporting

8.1 Results of the dynamic back pressure test shall be reported as shown below:

8.1.1	Alternate Method 1	Use Form 1
8.1.2	Alternate Method 2	Use Form 2
8.1.3	Alternate Method 3	Use Form 3
8.1.4	Alternate Method 4	Include on applicable of Forms 1, 2, or 3

Form 1

Summary of Test Results
Dynamic Pressure Performance

Date: _____ Time: _____ Application No._____

GDF Name and address: _____

Quantity _____ (gallons) of gasoline introduced into Stage II (check one): Riser [ ]
Bellows [ ]

Stage II system type: (Manufacturer and Executive Order number)_____

Nozzle No.	40 CFH .16" MAX	60 CFH .35" MAX	80 CFH .62" MAX	**PASS or FAIL**	Nozzle No.	40 CFH .16" MAX	60 CFH .35" MAX	80 CFH .62" MAX	**PASS or FAIL**

Did gauge needle pulsate or peg at any flow rate during test? No [ ] **PASS**
Yes [ ] **FAIL**

Indicate location of storage tank(s), condensate pot(s), pump(s), and location where gasoline was introduced into the vapor return system on reverse side of this page:

Tests Conducted By:_____

Test Company: _____ **Date of Tests:**_____

Tests Witnessed By: _____

Form 2

Summary of Test Results
Dynamic Pressure Performance

Date: _____ Time: _____ Application No._____

GDF Name and address: _____

Quantity _____ (gallons) of gasoline introduced into Stage II riser.

Stage II system type: (Manufacturer and Executive Order Number)_____

Riser No.	40 CFH .16" MAX	60 CFH .35" MAX	80 CFH .62" MAX	**PASS or FAIL**	Riser No.	40 CFH .16" MAX	60 CFH .35" MAX	80 CFH .62" MAX	**PASS or FAIL**

Did gauge needle pulsate or peg at any flow rate during test? No [ ] **PASS**
Yes [ ] **FAIL**

Indicate location of storage tank(s), condensate pot(s), pump(s), and location where gasoline was introduced into the vapor return system on reverse side of this page:

Tests Conducted By:_____

Test Company: _____ **Date of Tests:** _____

Tests Witnessed By: _____

Form 3

Summary of Test Results
Dynamic Pressure Performance

Date: _____ Time: _____ Application No._____

GDF Name and address: _____

Stage II system type: (Manufacturer and Executive Order Number)_____

Nozzle No.	Gas Grade	Gallons Disp.	Max. B.P.	Min. B.P.	Disp Rate	Allowable B.P.	**PASS OR FAIL**

Indicate location of storage tank(s), condensate pot(s), pump(s), and location where gasoline was introduced into the vapor return system on reverse side of this page:

Tests Conducted By:_____

Test Company: _____ **Date of Tests:** _____

Tests Witnessed By: _____